# Local Microwave Protective Detector
# Forteza FMC 24 Pro (50m, 100m, 200m, 300m)

## Description Manual & Service Instruction
## No. 2022-11-22

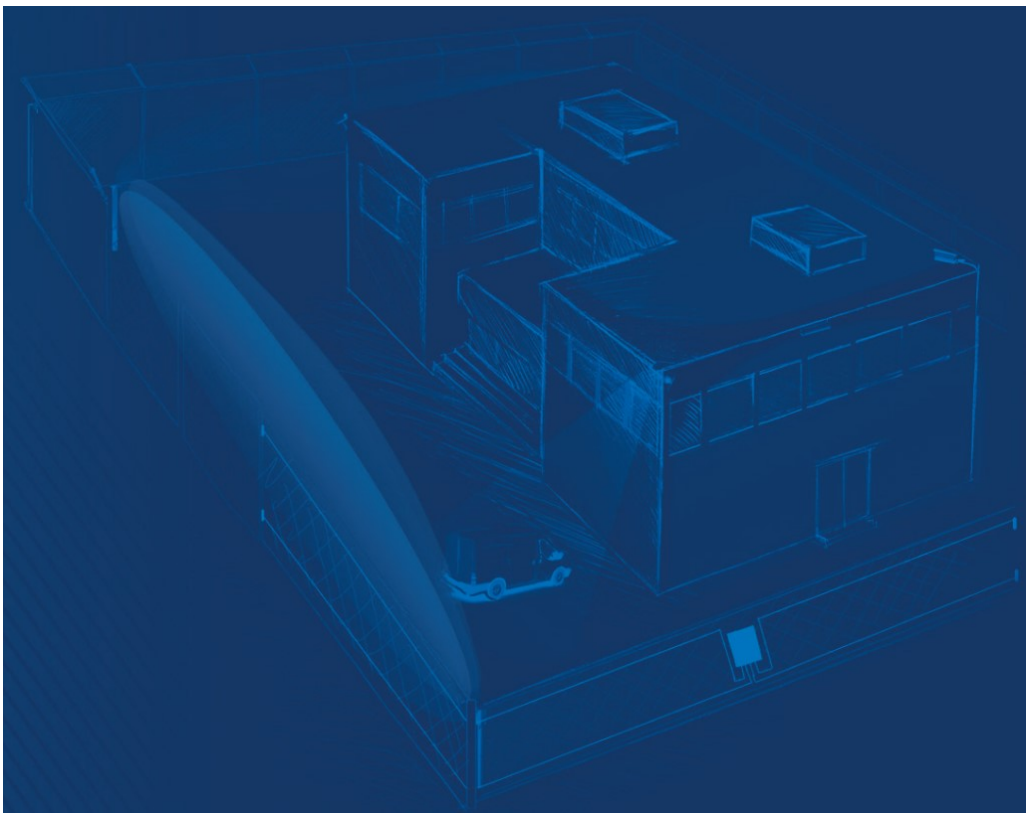

2022

# 1. DESCRIPTION AND OPERATION

The present description manual and service instruction contains information about the operation of the microwave perimeter protection detectors series FMC 24 Pro (50m., 100m., 200m., 300 m.) further *the detector*. This document contains the information required for the correct operation (use, transportation, storage, and maintenance) of the detector.

The following abbreviations are used in the present document:

Tx - transmitter

Rx - receiver.

MK - mounting kit;

## 1.1. Purpose

1.1.1. The purpose of the sensors is to protect the perimeter sectors and to detect an intruder crossing this sector at his “full height” or “bent”. An alarm is generated by breaking the individual point relay contacts. Then it is transmitted on the receiver.

1.1.2. The detector is intended for continuous round-the-clock outdoor operation at an ambient temperature -40ºC…+60°C and relative humidity up to 98% at the temperature +35°C.

1.1.3. When the sensor operates with the alarm complex, you can control the sensor with RS-485 interface.

## 1.2. Specifications

1.2.1. The recommended length (L) of a sector for modifications:

FMC 24 Pro (300m) – 10…300 m

FMC 24 Pro (200m) – 10…200 m

FMC 24 Pro (100m) – 10…100 m

FMC 24 Pro (50m) – 5 … 50 m

The detection zone height, h:

| | |
|---|---|
| FMC 24 Pro (300m) | 1,8 m* maximum |
| FMC 24 Pro (200m) | 1,8 m* maximum |
| FMC 24 Pro (100m) | 1,6 m* maximum |
| FMC 24 Pro (50m) | 1,6 m* maximum |

The detection zone width, b :

| | |
|---|---|
| FMC 24 Pro (300m) | 2,1 m* maximum |
| FMC 24 Pro (200m) | 1,9 m* maximum |
| FMC 24 Pro (100m) | 1,5 m* maximum |
| FMC 24 Pro (50m) | 1 m* maximum |

**in the middle of a sector at the maximum length*

| | |
|---|---|
| The cross speed: | 0,1 up to 8 m/sec |
| The quantity of the frequency channels | 8 |

| | |
|---|---|
| Supply voltage | 9…30 V |
| Current consumption | to 190 mA (12 V DC) |
| - Tx | 79 mA |
| - Rx | 111 mA |
| Individual point relay parameters: | |
| Switching voltage | 30 V maximum |
| Switching current | 0,1 A maximum |
| Alarm contact resistance | 100 Ohms maximum |
| "dead" zones | 2…4 m |
| Readiness time | |
| switch ON | 30 sec maximum |
| switch OFF | 1 sec maximum |
| The parameters of TAMPER button: | |
| - voltage | 30 V maximum |
| - current consumption | 0,1 A maximum |
| Protection class | IP55 |

The configuration and the dimensions of the detection zone are given in fig.1.1. and table 1.1

**Table 1.1**

| Length of a sector, **L**, m | 25 | 50 | 100 | 200 | 300 |
|---|---|---|---|---|---|
| Detection zone width, **b**, m, max | 0,7 | 1,0 | 1,5 | 1,9 | 2,1 |
| Detection zone height, **h**, m, max | 1,4 | 1,4 | 1,6 | 1,8 | 1,8 |

1.2.2. The detection zone is a volumetric part of a sector; if bridged and/or when receiver registers any movement within this sector it will generate an alarm.

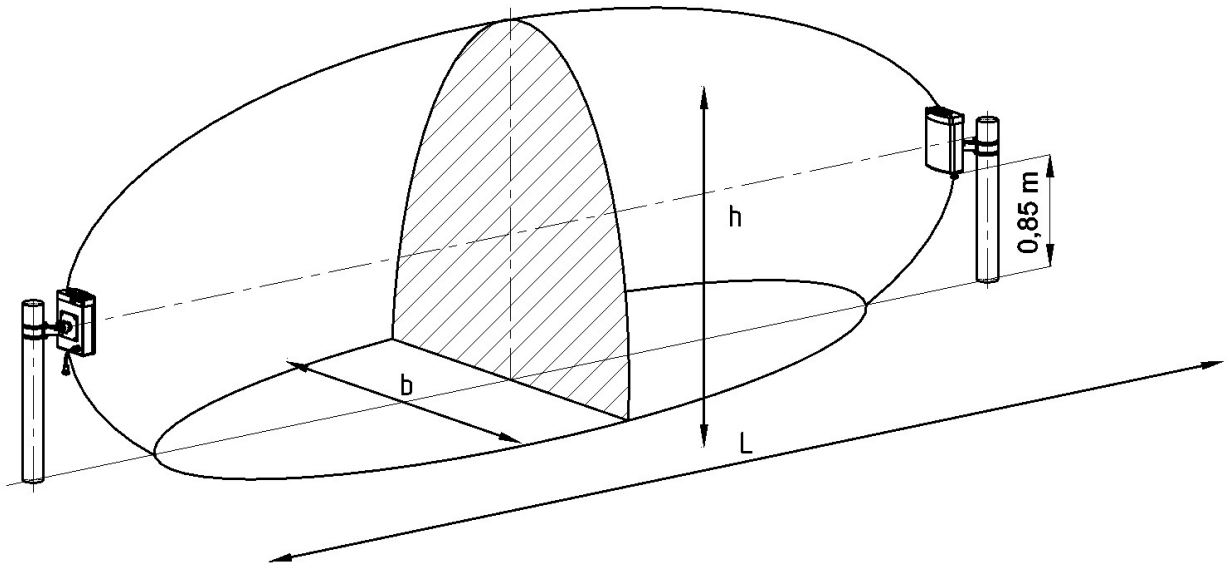

**Fig.1.1. Detection zone**

**L**- Length of a sector **h**- Height of detection zone **b**- Width of detection zone

1.2.3. In Fig.1.1 and Table 1.1 the height (h) and the width (b) of the detection zone are given for the middle of the sector. Moving towards the receiver or transmitter these dimensions decrease evenly, given the geometry of positioning the receiver and transmitter.

1.2.4. The recommended distance from the axis of the detection zone up to fences, building walls and other motionless objects at the sector length:

80…200m - 1, 1 m minimum
25…80m - 0, 8 m minimum
10…25m - 0, 4 m minimum

1.2.5. The sensor generates an alarm when:

- an intruder crosses the detection zone. Detection probability is 98 % when an intruder crosses the detection zone at his “full height” or “bent”;
- external electromagnetic field influences on Rx for its masking. There may be no alarm signal, but in this case the sensor should save its operability.

An alarm is generated by breaking the contacts of optoelectronic individual point relay (standby mode) for 3 sec minimum. Orange and brown wires marked «NC» (normally closed, or «NO» - normally open) and this alarm is transmitted over RS-485 interface.

1.2.6. The sensor generates a fault signal at:

- the absence of Tx signal;
- the absence of supply voltage or at its reduction lower than 8 mV;
- Rx or Tx failure.

1.2.7. Upon the opening of Rx cover the sensor generates an alarm. At the same time the contacts of the TAMPER opens too. These alarm signals from Rx and Tx are being transmitted by the separate pair of wires or a common pair of wires with alarm transmission.

1.2.8. The sensor doesn’t generate false alarms at:

- rain, snow, thick fog;
- solar radiation;
- wind speed up to 30 m/sec;
- objects moving with the linear dimensions up to 0,2 m (birds or small animals);
- irregularities up to ± 0,3 m;
- snow up to 0,5 m (without additional adjustment);
- grass up to 0,3 m;
- the influence of ultra-short waves emissions of the range 150-175 MHz and the power up to 40 W at the distance 6 m maximum.

1.2.9. The sensor is immune to electromagnetic interferences (voltage impulses in supply circuits, breaks of mains supply, electrostatic discharges and electromagnetic fields).

1.2.10. The case of the sensor is made of impact-resistant plastic, immune to UV radiation and the temperature changes in all the performance range.

1.2.11. The sensor mean lifetime is 8 years.

1.2.12. Maximum dimensions of the units without a mounting kit, mm:

- transmitter - 165x97x65;
- receiver - 165x97x65.

1.2.13. Maximum weight of Rx +Tx units with a mounting kit -1.7 kg:

## 1.3. Sensor components

Receiver – 1 pc

Transmitter – 1 pc

Mounting kit (MK) including:

- bracket – 2 pcs
- buckle – 4 pcs

Kit of tools and accessories including:

- screwdriver;
- spanner 8x10.

User manual

Package.

## 1.4. Operation principle

1.4.1. The sensor is a bistatic microwave device.

The sensor principle of operation is to generate an electromagnetic field between Tx and Rx. This field forms a volumetric detection zone in the form of a long ellipsoid of rotation. The sensor registers changes of the field when an intruder crosses a protected area.

1.4.2. An intruder crossing the detection zone causes some changes of the signal amplitude in Rx. The signal passes through the amplifier and is compared with the thresholds value according to the algorithm. If the signal change on Rx input is provoked by a person's passing, then Rx generates an alarm, breaking actuating relay contacts. The signal changes depend on: height and weight of the intruder, place of the sector crossing, its relief, and speed of the movement.

1.4.3. The signal on Rx input can be changed under the influence of other interference factors: precipitations, vegetation, small animals, and an electromagnetic interference, swinging of tree branches or gates, crossing the detection zone; which are all commensurable with intruder movements.

Other reasons, e.g. location of extensive constructions in the detection zone or near it (fences, walls), irregularities, and snow can influence the Rx input signal. In these cases the detection zone form is distorted because of re-reflections and interferences.

Multi thresholds operation algorithm permits to reduce the number of false alarms. **That's why one should observe the recommendations of the subsection 2.1.**

1.4.4. The alarms reception and indication are performed with the security system controlled by the relay contacts, and with the security systems operating with RS-485 interface. When an alarm is generated, the normally closed contacts are broken.

1.4.5. The operation of the sensor can be adjusted and controlled by connecting to the sensor via Android device using the receiver's integrated Bluetooth and USB interfaces, or the RS-485 interface (white and green wires).

## 1.5. Sensor structure

1.5.1. The detector consists of separate units (Rx, Tx) placed in the dust-, splash-proof enclosures.

1.5.2. There are openings on the two vertical surfaces of the housing for mounting brackets. The brackets can be mounted on the right and left side depending on the need. The FMC 24 Pro comes with plug-in screws that prevent housing from moisture.

1.5.3. Tx construction and its bracket are the same as the Rx construction (see fig. 1.2). The difference is in internal elements: under cover 6 are shown in fig. 1.3 (b); four wires cables are used instead of eight wires cables.

1.5.4. Mounting kit includes two brackets and four buckles for the mounting on the support of Rx and Tx.

1.5.5. The design of the holder allows the sensor to be mounted on a support (diameter from 40 to 100 mm.) using the included metal clamps. Using brackets from delivery set, it is possible to mount sensors on a flat surfaces (walls, fence). For mounting the brackets above the roof and fence, it is advisable to use brackets with protrusions of 250 - 500 mm (not included in the delivery set of FMC 24 Pro).

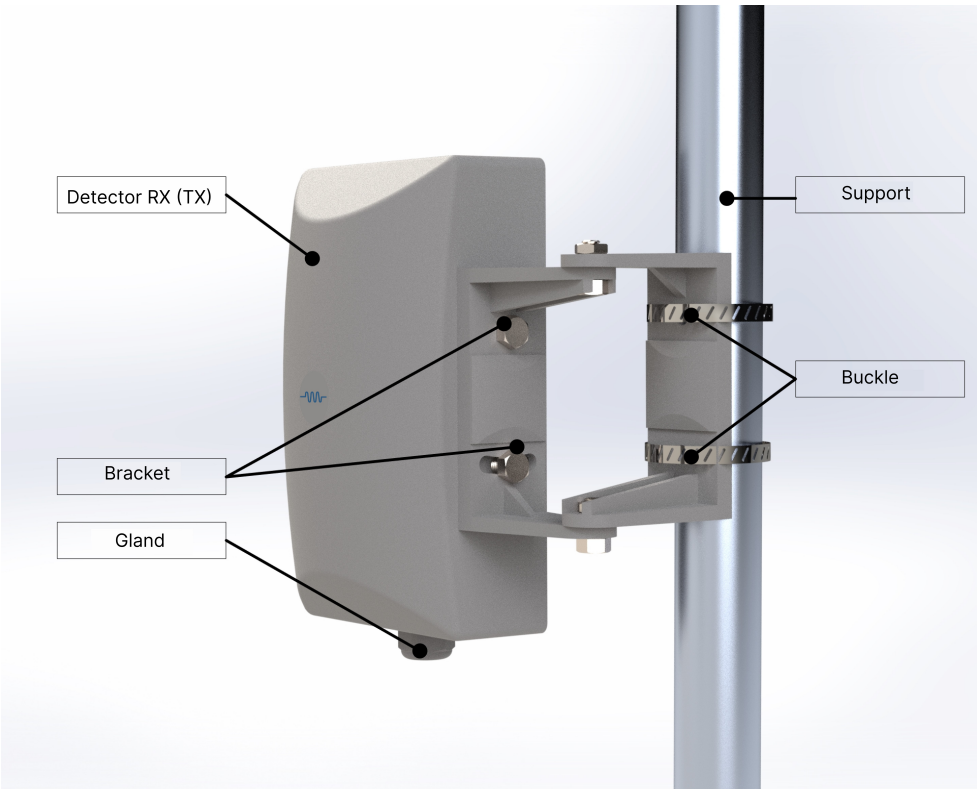


**Fig.1.2**


**Fig. 1.3**

Receivers control panel ( RX )

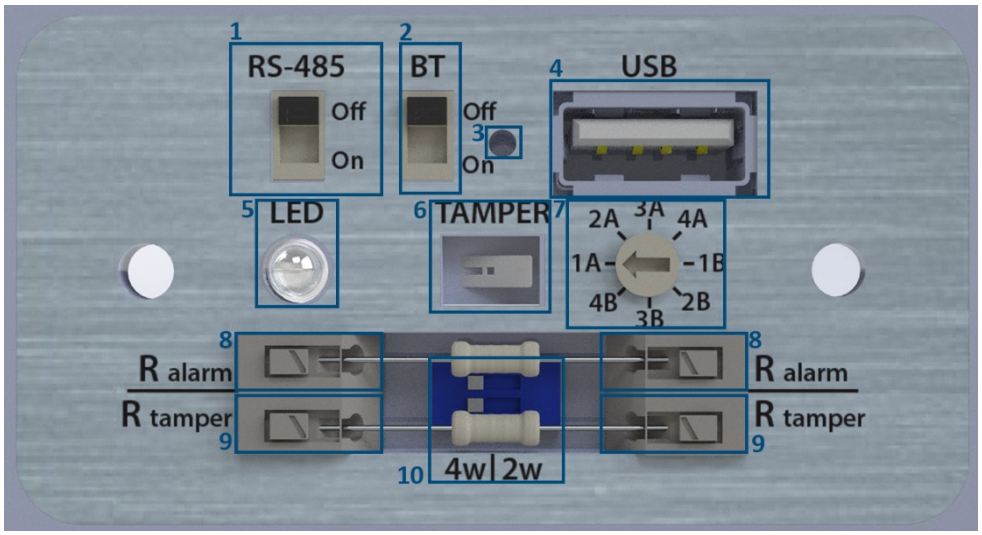


**Fig. 1.4**

**Marking (RX):**

1 – “RS-485” interface switch
2 – “Bluetooth” interface switch
3 – “Bluetooth” interface indication
4 – USB connection
5 – LED indication
6 – Tamper circuit
7 – Frequency band switch 1-8
8 – End of Line resistor of triggering circuit
9 - Tamper circuit resistor
10 - Alarm signal commutating scheme switch

Transmitters control panel ( TX )

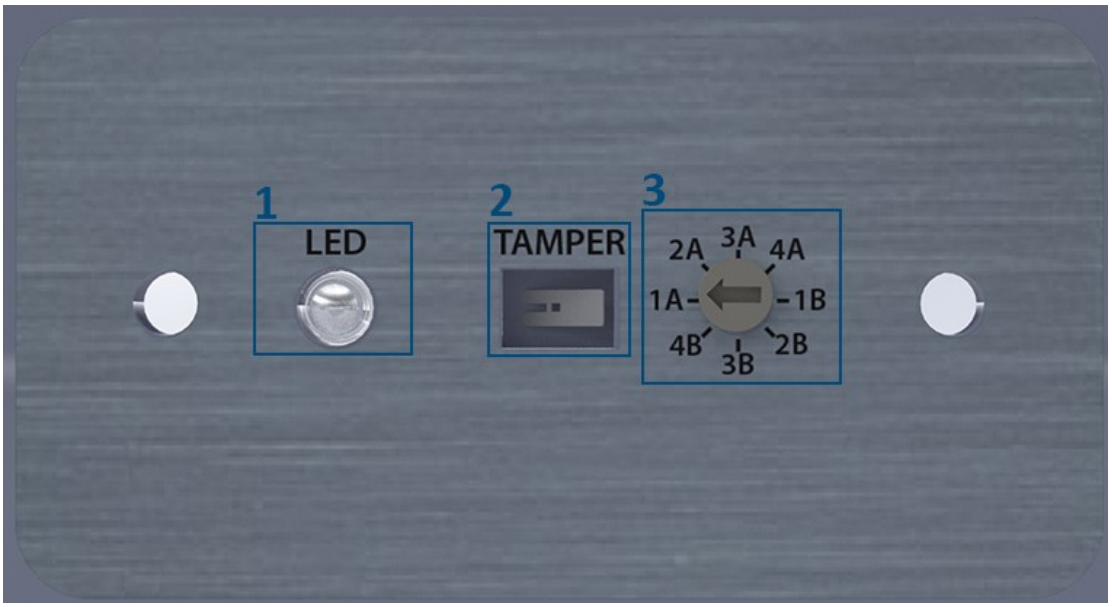


Fig. 1.5

**Markings (TX):**

1 – LED indication
2 – Tamper circuit
3 – Frequency band switch 1-8

***Note. Dear user! The manufacturer of the detector constantly upgrades their quality and reliability. That's why in some lots of detectors one can find design modifications unspecified in the documents delivered with the detectors. Nevertheless, the main specifications are valid.***

### 1.6. Adjustment, control and indication parts

1.6.1. The micro channels switches that provide the frequency channels switch are set on the transmitter and the receiver. Only one of four switches can be set with the same number on the receiving and the transmitting side when the power supply is ON.

1.6.2. Adjustment and control of the sensors is performed by using the controller placed on the receiver's panel, using Android or Windows software.

1.6.3. Manual adjustment: adjustment is possible without software, only visually "by eye".

1.6.4. Possibilities when using Android or Windows device: visualization of calibration; selection of the detection zone length; AUTOMATIC, MANUAL or SPECIAL sensitivity adjustment modes.

1.6.5. To prevent unauthorized openings of the cover 6 (fig.1.2), a tamper button is placed in the receiver. The tamper contacts are closed in the operating state. When the cover is opened, the contacts are disconnected and the contact circuit of the tamper button becomes open.

## 2. INSTALLATION AND ADJUSTMENT PROCEDURE

The following is the preparation for the sensor operation:

- preparation of the sector;
- signal cables and power supply laying;
- Tx and Rx installation;
- sensor connection (connection of power supply and intruder alarm loops);
- alignment of Tx and Rx antennas;
- Rx thresholds setting.

The principles and methods of these steps are given in i. 2.1-2.8.

### 2.1. Requirements for the protected sector of Rx and Tx alignment

2.1.1. The sector where Tx and Rx are located should meet the following requirements:

a) The height of irregularities should not exceed ±0,3m. If irregularities of the sector surface from the plane exceed ±0,3m, the specifications of the detector can worsen. In this case the issue of the use of the detector under these conditions can be resolved by the trial operation.

b) The height of the grass should not exceed 0,3m;

c) The height of the snow should not exceed 0,5m;

d) The maximum incline of the sector is 45˚;

e) Single fixed objects (e.g. posts, trees without lower branches) can be situated in the detection zone at the distance of 0,5 m minimum from the axis;

f) The width of the sector should meet item 2.1.3

2.1.2. Objects move by wind: gates, bushes, trees branches, etc. **should not be situated** in the detection zone and the distance must be:

**More than 1 m** from the axis of the detection zone if the perimeter length is between **50 and 100 m;**

**More than 1.5 m** from the axis of the detection zone if the perimeter length is between **100 and 200 m**;

**More than 2 m** from the axis of the detection zone if the perimeter length is between **200 and 300 m**.

2.1.3. Sector width should not be less than the detection zone one (see **Table 1.1**). The sensor can be mounted if the sector width is less. In this case the sensor application is determined by trial operation.

2.1.4. The range of the sector's slope is maximum 40˚.

2.1.5. The sensors with different channels should be mounted on the neighbor sectors. When the sensor is mounted one after another on the sectors, a number of the channels should be repeated successively from 1 to 4 providing the maximum distance of the sensors with the same letter.

2.1.6. To increase the detection zone in the height, it is possible to align the sensors in two tiers. The sensors should have different channels; two transmitters should be installed from one side of the protected area and two receivers – from another one. The sectors lengths should be identical.

2.1.7. The sensor can limit the maximum intruder's speed. If the maximum intruder's speed is reduced, the interference immunity will be increased. The manufacture produces the sensors with the maximum intruder's speed of 4 m/sec up to 10 m/s .You can reduce the minimum intruder's speed up to 0 ,1 m/sec ("middle") and up to 0,4 m/sec ("low")*. The speed of the violator can be adjusted by connecting to the sensor using an Android device with the "Forteza Soft" app or using the Windows "Forteza Software" device program. After that it is necessary to set-up the alarm sensitivity again.

*For example: open perimeter section - high movement speed of the violator (set min. 0.2 m/s max 10 m/s); standard protection section along the fence (set min. 0.2 m/s, max. 8 m/s) - average movement speed of the violator; the sensor is mounted on top of the fence - low speed of the violator (set min. 0.1 m/s, max. 8 m/s).*

## 2.2. TX and RX mounting

2.2.1. Mark the perimeter area for the places where the supports will be mounted. To generate a continuous protected boundary, the installation of Tx and Rx isn't permitted on adjacent perimeter sectors. The right installation on adjacent perimeter sectors is Tx and Tx,

Rx and Rx. To generate the continuous protected boundary, it is necessary to provide the overlapping of the sectors detection zones (see fig. 2.1 and 2.2). The overlapping is necessary to eliminate the possibility of the sector overcoming under or above Tx (Rx) unit near the support.

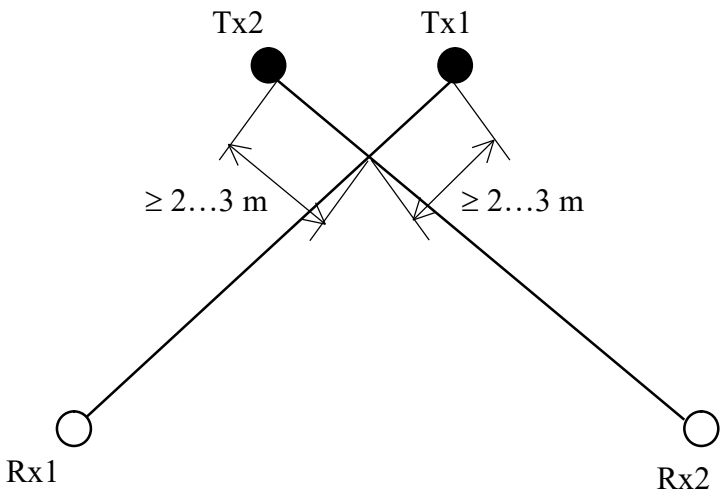


**Fig. 2.1**

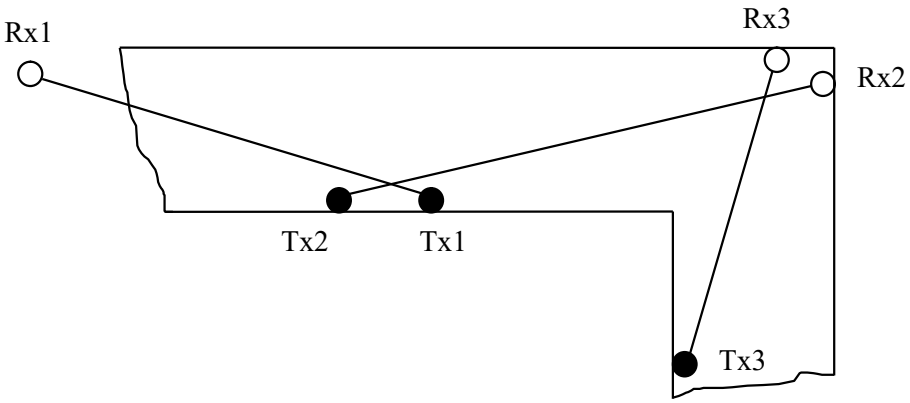


**Fig. 2.2**

***Note: To avoid co-interference between neighbouring detectors, you can adjust them to different operation channels (don't forget to change receiver's and transmitter's operation channels too, with the mentioned way in the manual).***

***Note: Avoid installation in a way where the reflected microwave signals (by metal fences and other metal objects or by wet surfaces after rain and snow) may cause interference and false alarms.***

2.2.2. Mount the supports. It is recommended to use metal or asbestos-cement tube as supports of 70…90 mm diameter. The height of the support above the surface of the ground is given in fig. 2.3. In the places where there is a lot of snow, the superstructure of the support should be 1500 mm minimum. As for the support construction, it is necessary to provide some dowels for concreting and some holes for the cable gland. The example of the

support mounting is given in fig. 2.3. In the snowy regions the superstructure of the support should be 1500 mm minimum.

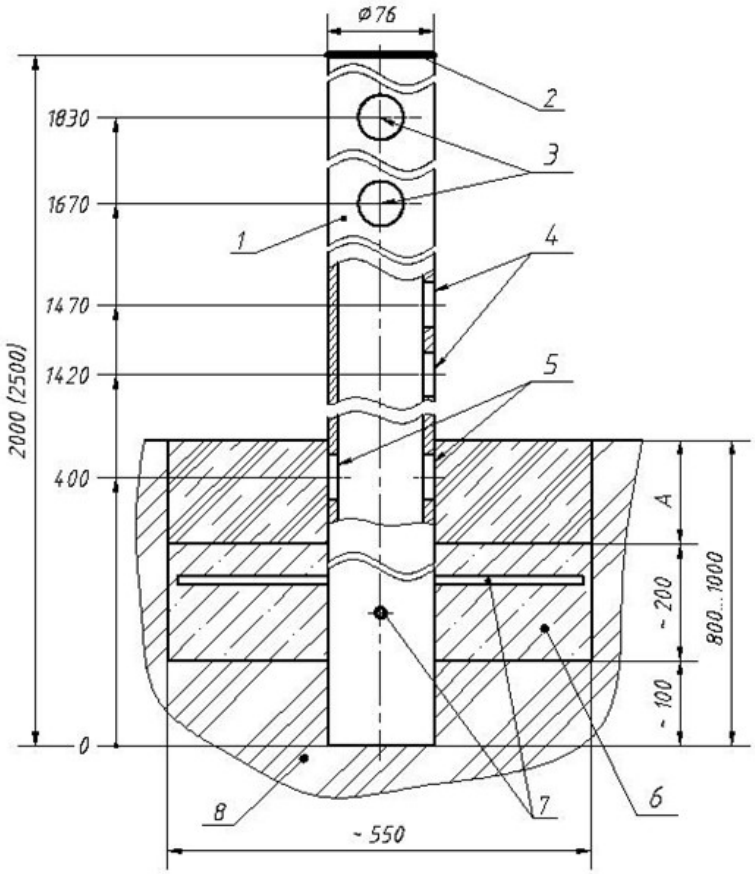


1 - support;
2 - plastic plug;
3 - hole for the cable input inside the support;
4 - hole for the main cable and sensor cable input;
5 - hole for the main cable input;
6 - concrete (gravel);
7-dowels for prevention the unauthorized dismounting of the support;
8- ground

**Fig. 2.3**

***Note.***

1. ***For A size the ground should be laid after installation works.***
2. ***Dimensions are given in millimeters (mm).***

2.2.3. Other variants of the sensor mounting (for example on the fence or wall) can be applied according to the protection tactics. If the sensor blocks the top of the fence, it is recommended to fasten the support with the fence with a solid mechanical or welded joint. **When installing the sensors above a fence or wall, the parameters of the detection zone are changing (see Table 2.1).**

**Table 2.1**

| Sensor | Max detection zone length (L), m | Max detection zone width (b), m | Max detection zone height (h), m |
|---|---|---|---|
| FMC 24 Pro (100m) | 60 | 1,0 | 1,0 |
| FMC 24 Pro (200m) | 120 | 1,5 | 1,5 |
| FMC 24 Pro (300m) | 160 | 1,5 | 1,5 |

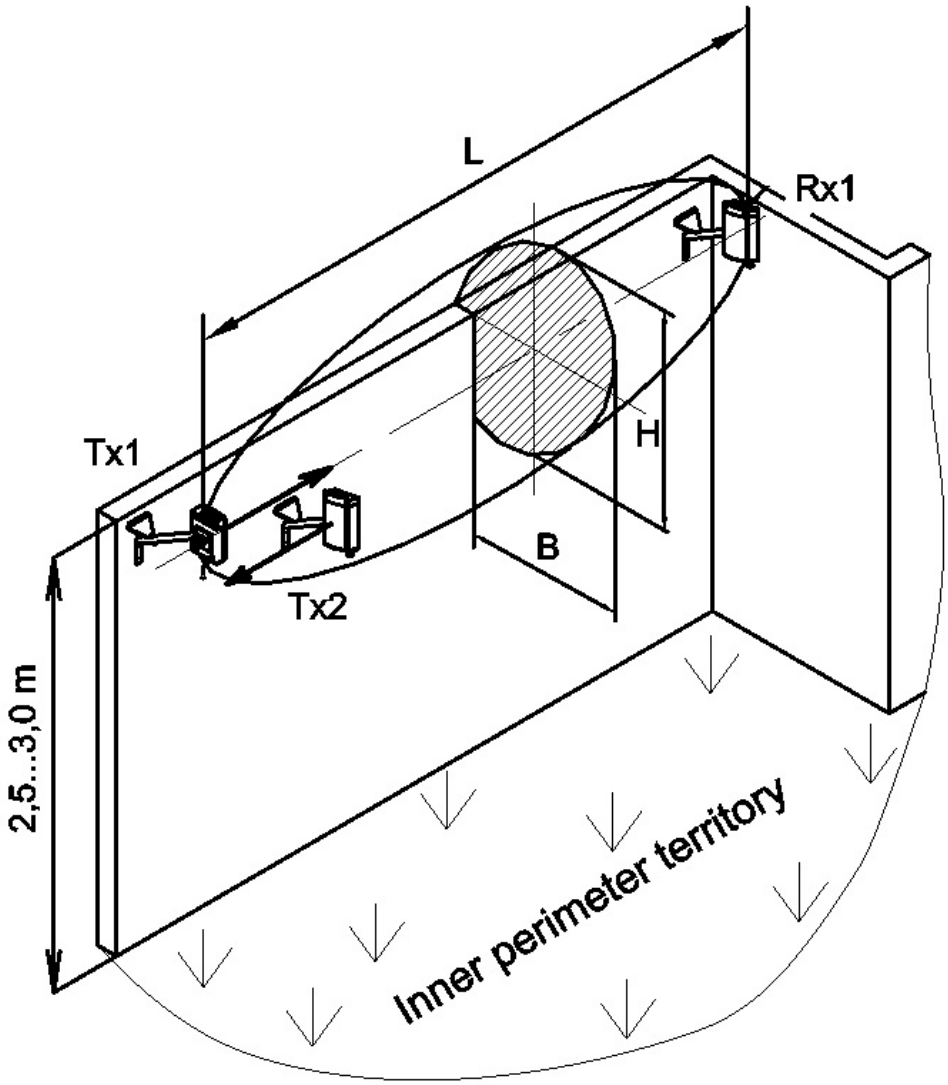


**Fig.2.4**

2.2.4. Lay the main cables according to the project of the security system. It is recommended to use multicore cables with the core screen or metal sheath. The cable core section is chosen on condition that the supply voltage is not less than 9 V for every sensor unit. It is not recommended to lay the main cables near heavy electromagnetic interference

sources (power lines, antenna systems, and etc.) and to use free cable cores for impulse signal transmission. **CAUTION! To reduce the level of electromagnetic interferences, it is recommended to mount the power supply unit at a distance up to 300 m from the place where the sensors are installed.**

2.2.5. The mounting kit (MK) for mounting on the top of the fence can be delivered on the customer order to protect the perimeter site from the intruder climbing over the fence and the intrusion into the window. The example of the sensor installation with the brackets application 350, 500 mm is given in fig. 2.4. The detection zone sizes are shown in Table 2.4. The angles to turn horizontally the sensor units on the brackets are 180˚, vertically: up – at the angle of 17˚, down - 45˚.

***Notes.***

***1. If the upper part of the fence is protected with physical protection devices, it is necessary to use the bracket of 500 mm. If the upper part of the fence is not protected with barbed wire, it is recommended to use the bracket of 350 mm.***

***2. The height of Rx and Tx units for the protection of the fence upper part is equal to the fence height ±100 mm.***

***3. The dimensions and materials of the fence are not specified. It is necessary to provide the fence rigidity.***

***4. The detection zone dimensions b and h are given for the correct alignment of the sensor according to i. 2.4, 2.5.***

***5. To avoid co-interference between neighbouring detectors, you can adjust them to different operation channels (don't forget to change receiver's and transmitter's operation channels too, with the mentioned way in the manual).***

***6. Avoid installation in a way, where the reflected microwave signals (by metal fences and other metal objects or by wet surfaces after rain and snow) may cause interference and false alarms.***

2.2.6. The set of fastening elements of the transmitter and receiver to the support consists of two brackets and four fasteners. Mount the transmitter and receiver on the brackets using screws (Fig. 1.2)

## 2.3. Sensor connection

2.3.1. Connect the necessary power, signal, and remote control circuits. Rx and Tx unit is connected with its own cables. The color or marking of the cable conductors indicate their purpose.

The information about cable conductors marking, color and purpose are given in **Table 2.2.**

2.3.2. Set the letter of the sensors with the channels switches of Tx and Rx.

**Table 2.2.**

RX

| Color | Purpose | Marking |
|---|---|---|
| Blue | Power supply | « - » |
| Red | | «+» |
| Brown | Normally closed contacts of actuating relay NC | $NC_1$ |
| Orange | | $NC_2$ |
| Black | Tamper button contacts | $Tamper_1$ |
| Yellow | | $Tamper_2$ |
| White | Contacts of RS-485 connection | RS A |
| Green | | RS B |

***TX***

| Color | Purpose | Marking |
|---|---|---|
| Blue | Power supply | « - » |
| Red | | «+» |
| Black | Tamper button contacts | $Tamper_1$ |
| Yellow | | $Tamper_2$ |

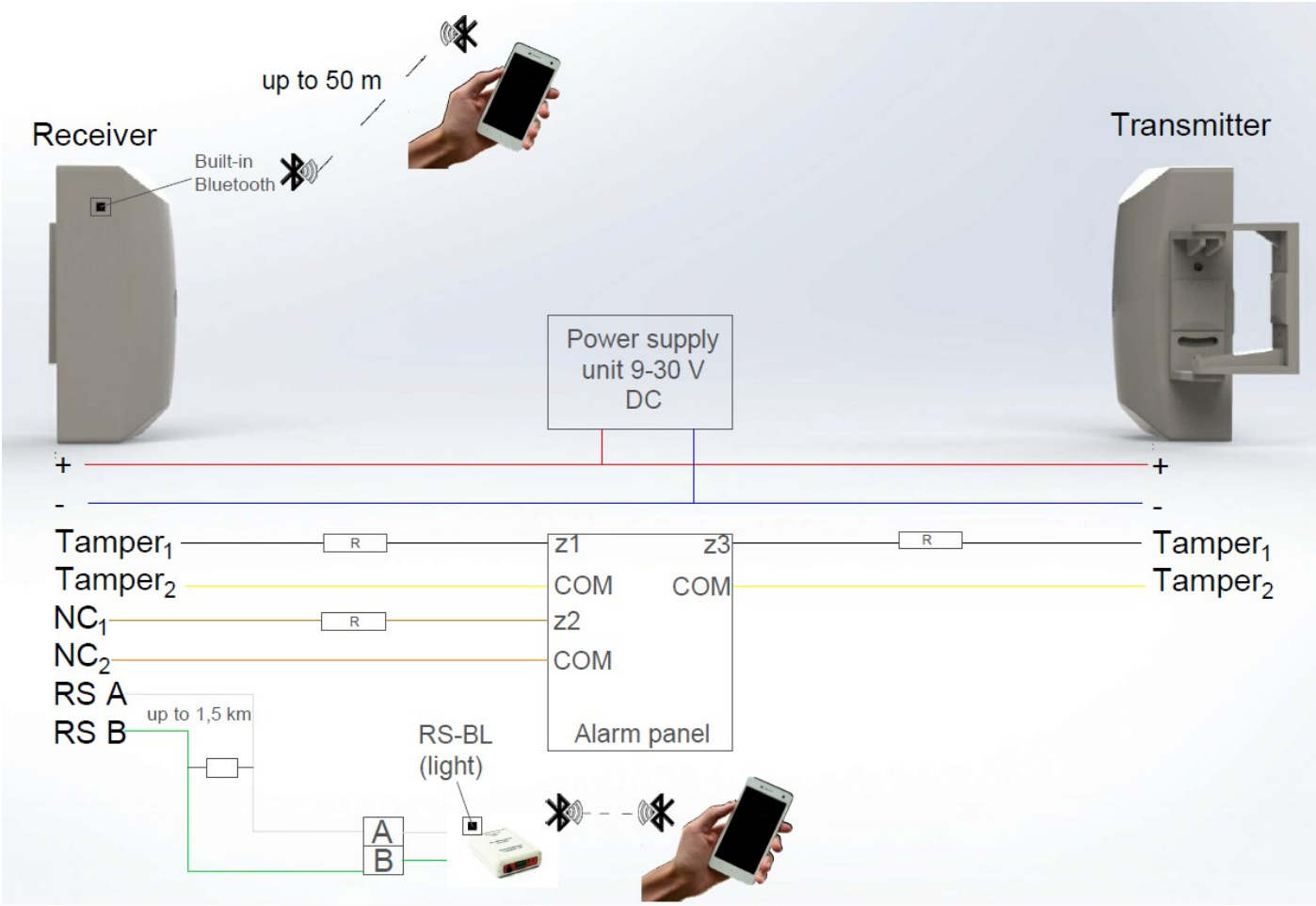

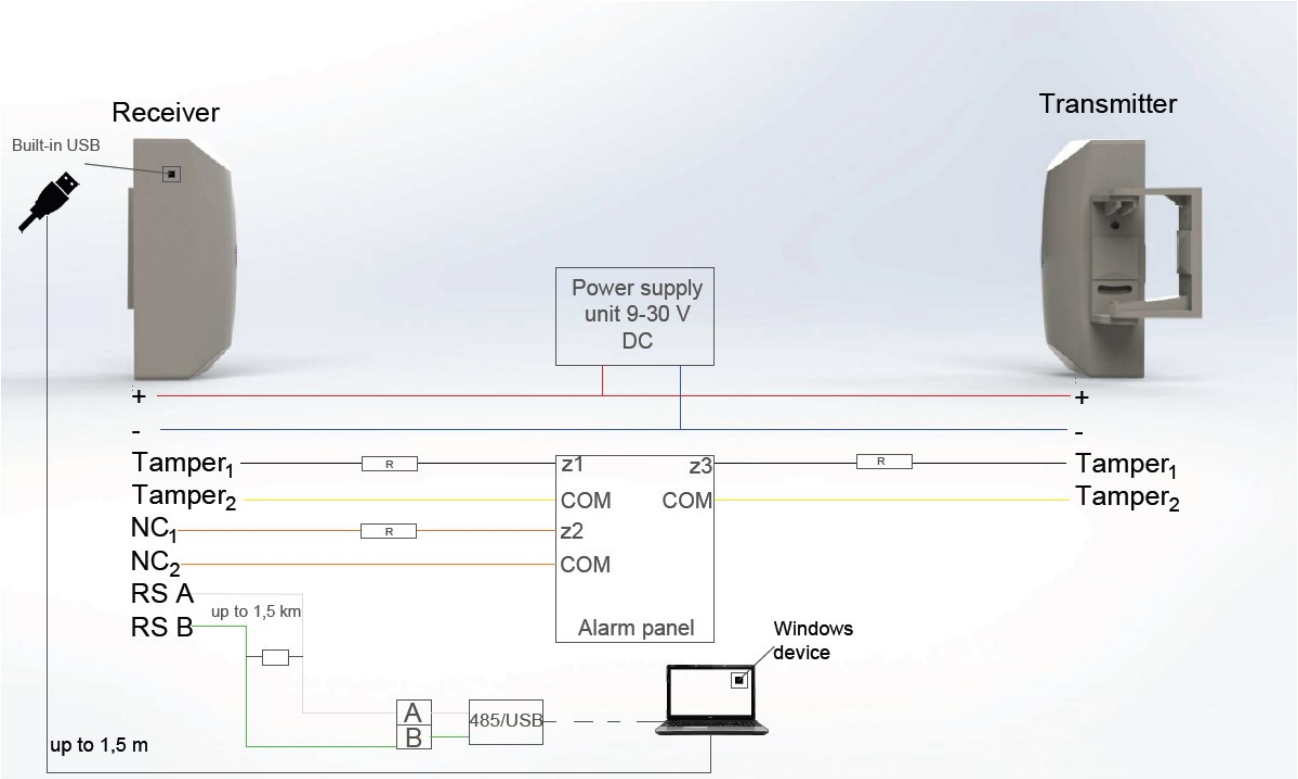


**Fig. 2.5**

***Warning: Do not open the detector's housing, because it may damage the device!!!***

***Note: Always use separated cables for the power supply circuit and the cables for the alarm signal circuit to avoid unexpected alarms.***

***Note: The alarm contact loading capacity is up to 30 Vdc 0.1 A.***

***Note: All the electronic connections should be carried out only after power is disconnected.***

**Methods of connecting the system to the main security control panel**

2.3.3. In the transmitter, the tamper circuit contacts ("TAMPER") must be connected to the control unit with a separate closed circuit.

In the receiver, the tamper circuit contacts ("TAMPER") and alarm circuit contacts can be connected to the control unit (protection panel) in two ways:

1st way, Separate closed circuit:

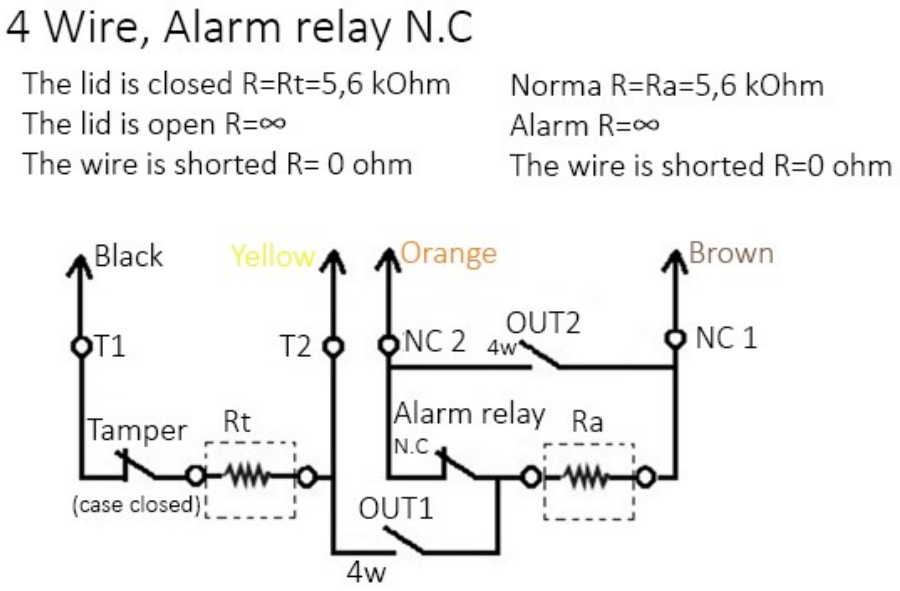


2nd way: The actuator TAMPER relay is switched on sequentially with the contacts of the actuator relay contacts. **(Factory settings)**

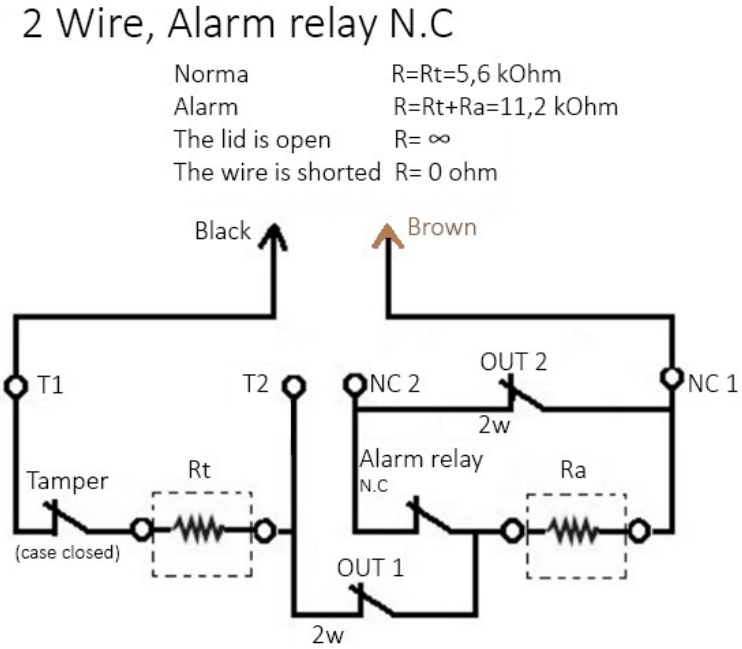


NOTE. In order to use 1st way, switches no. 10 (see figure) must be switched to position 4w. In order to use 2nd way, switches no. 10 (see figure) must be switched to position 2w.

**Factory settings: $R_{TAMPER} = R_{ALARM} = 5{,}6$ kOhm.**

## 2.4. Sensor adjustment with the built-in adjustment, control and indication parts

2.4.1. **Preliminary adjustment of Tx and Rx**

2.4.1.1. Loosen the screws securing the receiver and transmitter bracket (Fig.1.2).

2.4.1.2. Point the receiver and transmitter at each other.

2.4.1.3. Tighten the bracket mounting bolts.

2.4.2. **Main adjustment of Tx and Rx**

2.4.2.1. Open the receivers/transmitters cover (fig.1.2).

2.4.2.2 Channel tuning. The receiver and transmitter must operate on the same channel. For other near detection zones other channels must be set.

2.4.2.3 Check the sensors connections between power supply circuit and output circuit. Turn on the power supply.

2.4.2.4. When power is supplied to the sensor units (receiver and transmitter), a flashing LED light informs about the set channel.

TRANSMITTER. After supplying power, the LED light will blink as many times as the set channel is set, then it will light continuously, which means that the power supply is correct and the transmitter is operating normally.

If the LED light blinks in red, it means that the power supply current is below the required value of 9V;

A rare blinking of the red LED light indicates a transmitter malfunction.

RECEIVER. After supplying power, the LED light will flash as many times as the set channel is set, after that it will start to light in green, which means that:

- power is supplied
- synchronization of the receiver with the transmitter happened.
- the signal level is within the appropriate range.
- the protection zone is secured.

Red LED light means that the sensor is in the “alarm trigger" state because:

- no signal is received from the transmitter;
- the received signal is too strong;
- intrusion into the protection zone;

If the LED light flashes in red, it means that the supply current is below the required values of 9V;

A rare blinking of red indicates that the signal level is in the wrong range.

- Continuous red light with periodic LED light going off (1 time every 4 seconds) means that the level of the received signal exceeds the permissible level (> 650 mV).

- Flashing red LED light indicates that an ANDROID or WINDOWS device is connected to the receiver and compatibility is in progress.

2.4.2.5. Positioning (calibration) is done gradually. Calibration can only be started when the transmitter's LED light is solid green and the receiver's LED light is solid green or flashing red. If the LED light on the receiver will light in red continuously - calibration is not possible. Positioning work can be started from both the transmitter and the receiver. In manual mode calibration is performed visually ("by eye").

### 2.4.3. Sensitivity adjustment

2.4.3.1. Set the sensitivity parameters according to the tactics of crossing the guard sections (standing or bending) over the entire length of the zone. It is recommended to start such control crossings in the middle of the protected area. **After each pass, you must walk outside the detection zone at a distance of 2-4 m and wait for about 5-7 seconds**. Otherwise, the results obtained in the previous pass may affect the results of the next pass.

2.4.3.2. Perform test runs in problematic areas of the detection zone: trenches, hills, spaces near barriers, buildings and trees, which are in the detection zone. If necessary, change the sensitivity of the sensor.

*Note. If, at the factory settings, the sensor does not activate an alarm during the test run, please adjust the sensitivity using the "Forteza soft" program.*

2.4.3.3. When adjustment work is finished, close the covers of the receiver and transmitter terminals.

Leave the "BT" and "RS-485" switches in off state (if not used for remote setting).

2.4.3.4. After completing the sensor adjustment work, after 2-3 days we recommend performing a system start-up test in order to detect and eliminate any installation and adjustment errors.

## 2.5. Software installation and detector adjustment by ANDROID device (using built-in Bluetooth/RS-485 converter)

The android device allows checking the signal level, change sensitivity parameters, detection zone length, giving a signal, setting some parameters inaccessible for Preliminary adjustment.

# 3. PRELIMINARY CONFIGURATIONS

Before using the package it is necessary to download and install Forteza Android Software application at chosen Android–device.

When starting the application Connection Wizard connection configuration window (Figure 3.1) appears.

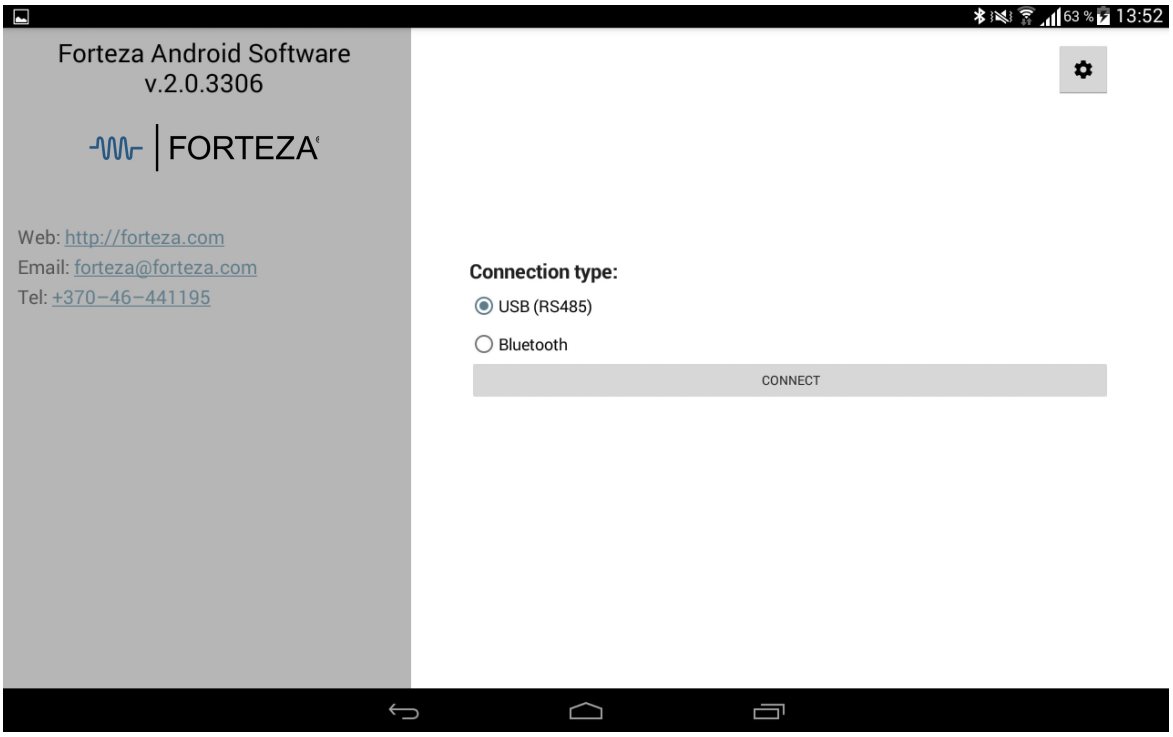


**Figure 3.1**

In this window you need to select how to connect the Android-device to the detector:
- Bluetooth wireless connection using built-in Bluetooth interface **(password/pin for BT are marked on the inside of the cover, see fig. 1.3)**
- Wired connection via USB-port using USB/RS-485 converter.

*When the application is initially started, the connection to detector 253 (broadcast address) is made at the speed of 57,600 bps.*
*When necessary, the communication speed via RS-485 interface and the detector's network address may be changed in the Network settings window, which appears when button is pressed after connection type selection.*

After selecting Bluetooth connection, a selection line appears, which contains the last connection number (Figure 3.2), *detectors number is specified on its body.*

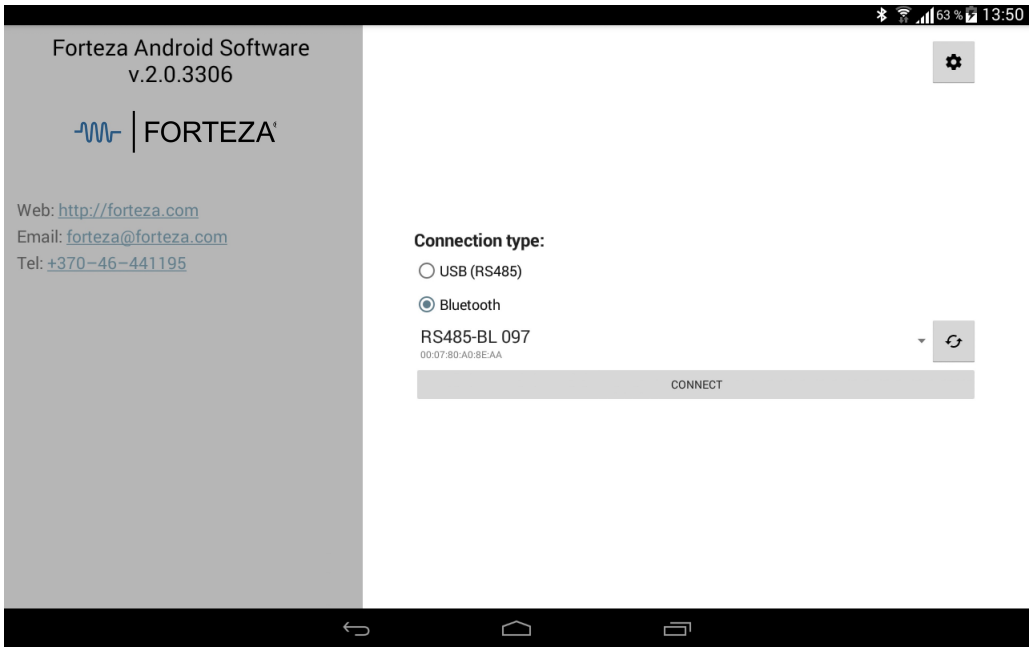


**Figure 3.2**

When necessary to connect to another detector click button and select the desired number. If the needed device is not listed, you should search by pressing button .
After completing selection, the connection type and parameters, press CONNECT. Process of establishing the connection and receiving information on the detector status will begin.

## 4. PROGRAM START-UP, GENERAL TAB

After connecting the Android-device to the detector, the main window with active GENERAL tab (Figure 4.1) will appear; it displays the detector parameters. Before starting work, it is recommended to go to the "LOGS" tab and synchronize the time and date. (unit 8 “Work with Log”). This action is necessary for the further adequate display of information in the LOGS journal.
If the supply voltage is insufficient, the POWER inscription in the left column will be highlighted in a similar manner.

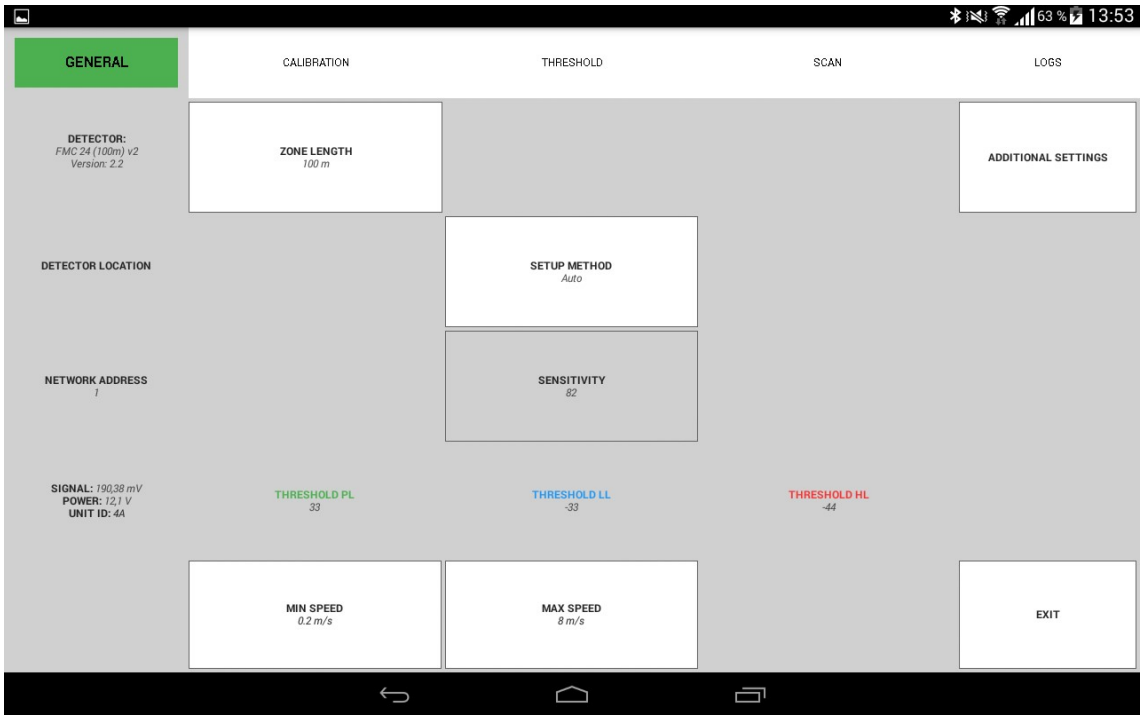


**Figure 3.3**

Inputs status shows the tab header background color at the screen top:
- Normal — green;
- Alarm — red;
- Failure (Break, Closed, Noise) — yellow.

After pressing ADDITIONAL SETTINGS button (Figure 4.2) it will be possible to enter the information about detector location (DETECTOR LOCATION), change its network address (NETWORK ADDRESS), output relay contact type (ALARM TYPE), and duration of alarm notification duration (ALARM TIME), as well as sound management (ALARM SOUND). Acceptable number of characters and the number limit to enter is displayed in the pop-up window tips.

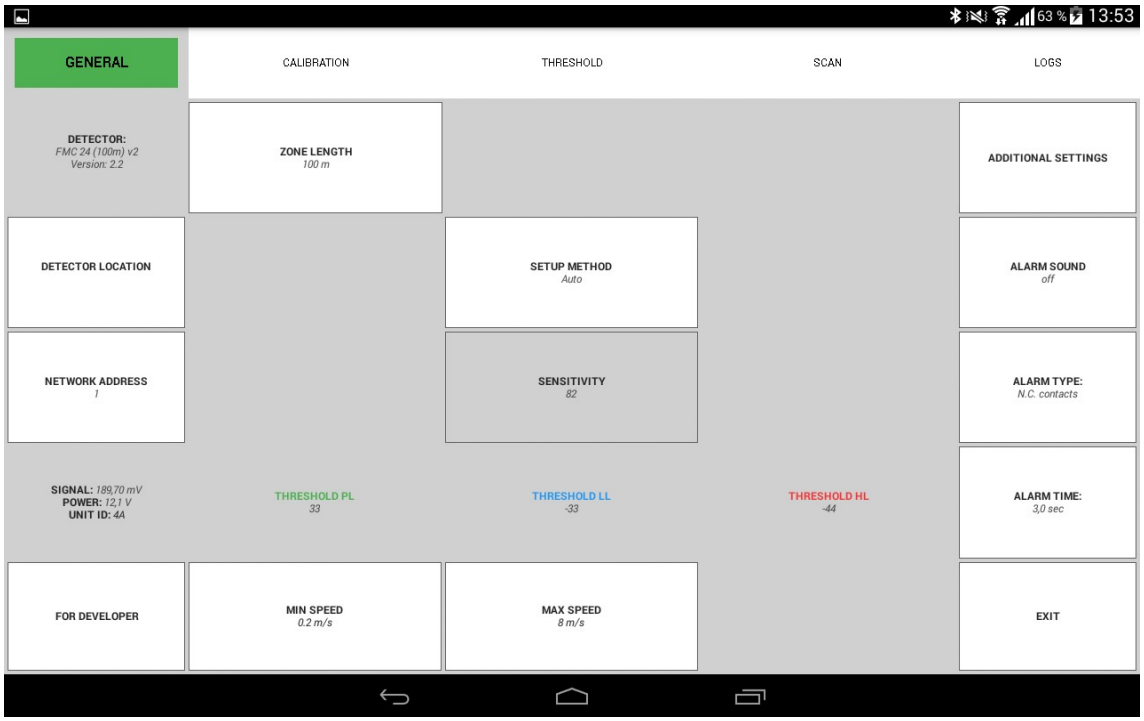


**Figure 3.4**

**4.1** On the screen you can see the current setting parameters. They have the following meaning:

***Detector:*** Information about detectors model *FMC,* operation frequency *24* (24.525 GHz), operation length.

***Version:*** Version of software

***Alarm type:*** Relay (normal close contact)

***Unit ID:*** It means the frequency modulation of the receiver. The transmitter and receiver should be on the same frequency modulation (1A ~ 4B). Frequency modulation is changed by using the switches (see 2.4.)

***Zone length:*** The currently selected operation distance for the detector. It is really important to choose the proper operation distance.

***Note: It is used only in Setup Method: AUTO***

***Note: If the zone length is not the real distance, there might be higher false alarm rate or poor sensitivity.***

***Setup method:*** The currently selected setup method. You can choose 'Auto', 'Manual', SPECIAL 1 or SPECIAL 2 setup modes. In 'Manual' setup you can set sensitivity, in 'Auto' setup you can change 'Zone length'. **In most of the cases 'Auto' setting is recommended.**

***Sensitivity:*** It means the sensitivity of detection. You can only set sensitivity in 'Manual' Setup method. In most of the cases sensitivity setting is not recommended.

***Speed:*** It is the motion speed range which is identified by the detector.

***Note: The speed range which is too big has higher false alarm rate, the speed range which is too low has poor sensitivity.***

***Signal:*** Shows the signal between transmitter and receiver.

***Save* alarms:** It is a useful function if the installer is alone. With this function you can count alarms, so you can check your detector with test crossings. With 'Reset' button you can reset the counter.

## 5. SENSOR ADJUSTMENT WITH ANDROID DEVICE

**5.1.** Perform a preliminary adjustment of Tx and Rx (i. 2.4.1).

**5.2.** Before any changes in Setup bookmark, you need to calibrate your detector. You can make it if you select Calibration bookmark.

**5.3.** Firstly you need to calibrate (fine positioning) the transmitter unit, then the receiver unit.

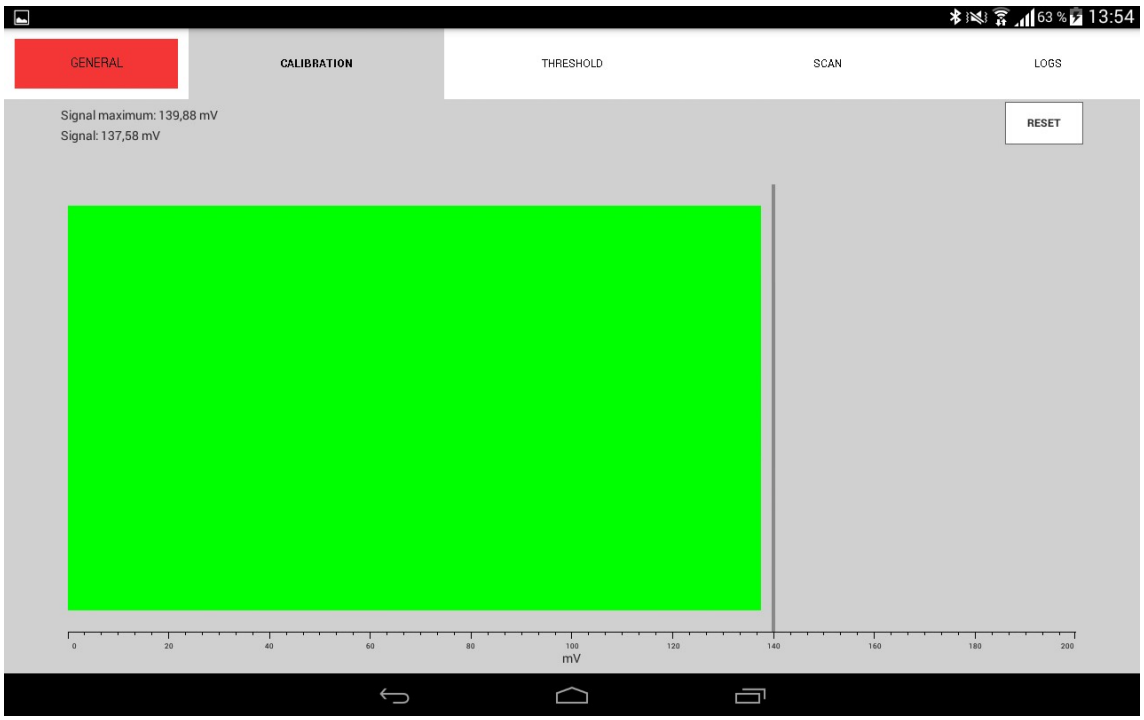


**Fig.2.13**

**5.4.** Here you can see the received signal from the transmitter on a dynamically changing scale. The maximum value of the current positioning is always signed. If you are close to the maximum value of the current positioning, the changing lane becomes green. It means the signal increases. If the lane is red, you should continue positioning as you are not close to the maximum value. With 'Reset maximum' button you can reset the current maximum, and you can look for another reference value.

***Note: A few minutes of positioning is always recommended to have a good maximum value of current positioning, what you can use as a reference.***

**5.5.** Check the value of "Calibration" voltage as a result of the adjustment. If "Calibration" voltage is less than 3 mV, it is necessary to repeat the alignment vertically and horizontally for more exact adjustment. After finishing adjustment work, check the signal value. The boundary values of 50 mV and 800 mV during the adjustment are recommended.

***NOTE: There should be at least 50 mV minimum signals. Detectors installation height is 95 cm. If you cannot reach it: change the position (95 cm + 5 cm or 95 cm – 5 cm.) of the detectors or the operating distance;***

**5.6.** If the voltage controlled by the calibration is over 800 mV (on short sectors), it is recommended to make the misalignment of Rx and Tx upwards at a small angle so the voltage does not exceed 800 mV.

***NOTE: Don't point Rx and Tx down or towards.***

## 6. SETTING THE THRESHOLD (LIMIT VALUES) USING ANDROID

After successful calibration you can return to the setup menu. Here you can define the working parameters of the detectors. The signal must be stable, within the range +15 mV or -15 mV, if the noise signal is changing more than +15 mV or -15mV please check the detection zone, there can be moving objects. If you can't remove them or there is no moving object which can make influence to detection zone, please use manual setup method. Set up the sensitivity level 2-3 times higher than existing noises signal level. Follow 2.5.5.4. If the detector doesn't generate the alarms throw passages, clear the detection zone as written in 2.1.3

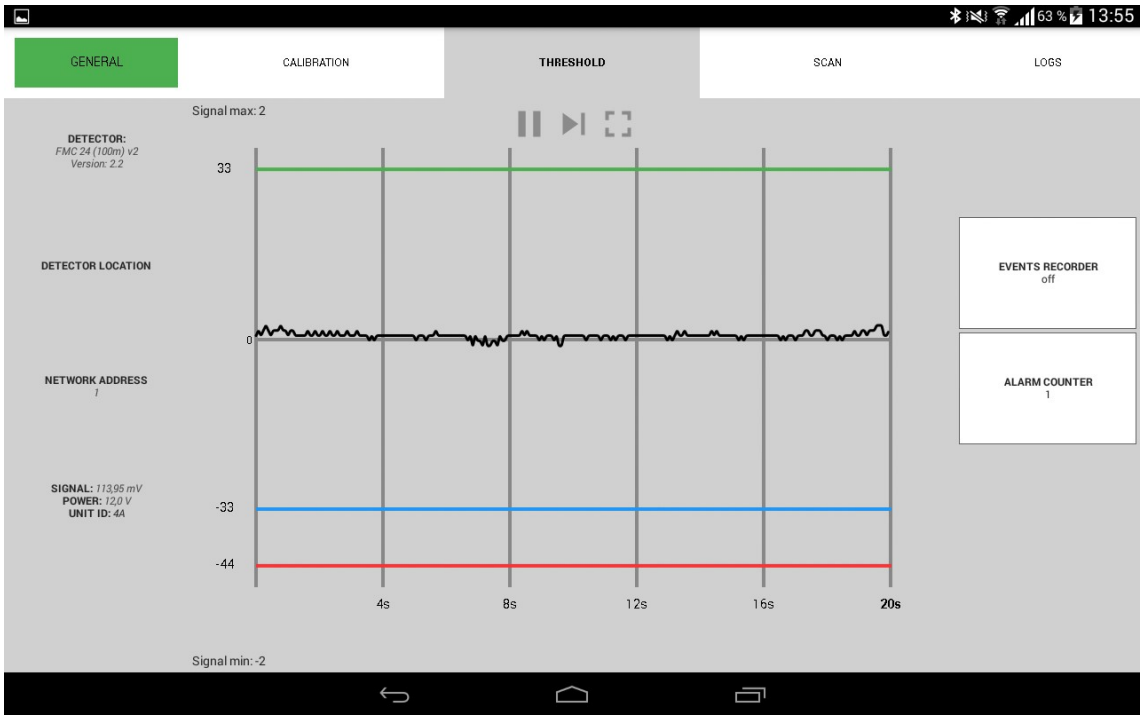


**Fig. 6.1**

## 6.1. Setup Method: Auto

In most of the case 'Auto' mode and default sensitivity value is recommended. The most important is to set the proper 'Zone length' according to the installation site, sensitivity value will be set up automatically. You can send your setting to the receiver with 'Apply' button, or you can cancel your settings with 'Cancel' button.

***Note: If the zone length is not the real distance, there might be higher false alarm rate or poor sensitivity.***

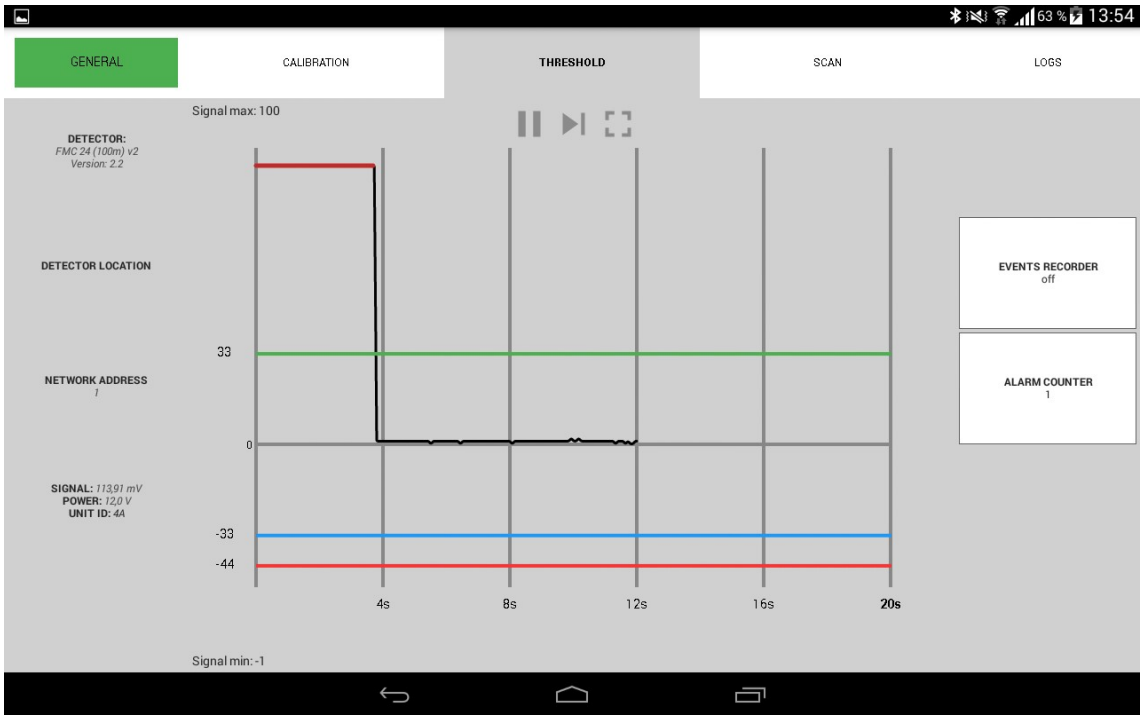


**Fig 6.2**

**6.1.1.** Cross these passages in "full height" and "bent" on different distances from Tx and Rx. It is recommended to begin doing these "approved" passages in the middle of the protected zone. After each passage it is necessary to leave the detection zone for the distance of 1-2 m and make a pause from 5 to 7 sec. Otherwise, the results of the previous passage can influence on the next one.

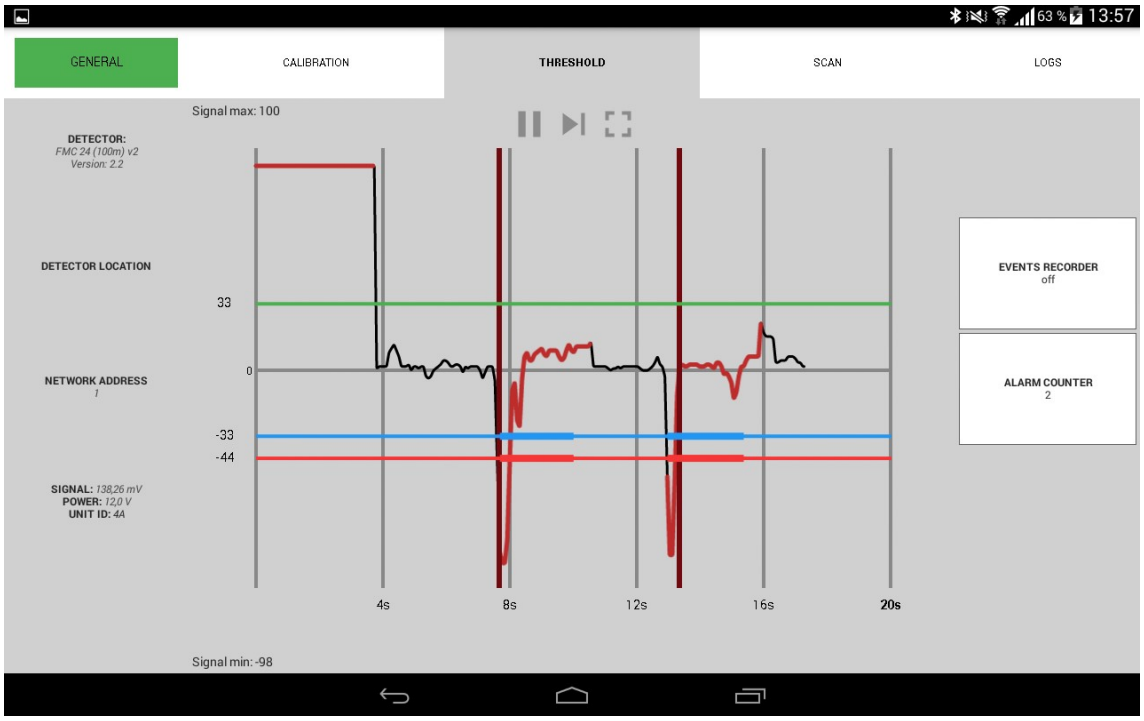


**Fig. 6.3**

**6.1.2.** You can change the minimum detected speed in m/s (Vmin), the maximum detected speed in m/s (Vmax). You can confirm your settings with 'Apply' button.

***Note: Too big speed range has higher false alarm rate, too low speed range has poor sensitivity.***

## 6.2. Setup method: Manual

In 'Manual' setup method you can set sensitivity. But in most of the case 'Auto' mode and default sensitivity value is recommended. You can send your setting to the receiver with 'Apply' button, or you can cancel your settings with 'Cancel' button.

***Note: Black line – signal between transmitter and receiver***
***Green and Blue – 1 section alarm thresholds***
***Red – 2 section alarm threshold (Alarm)***

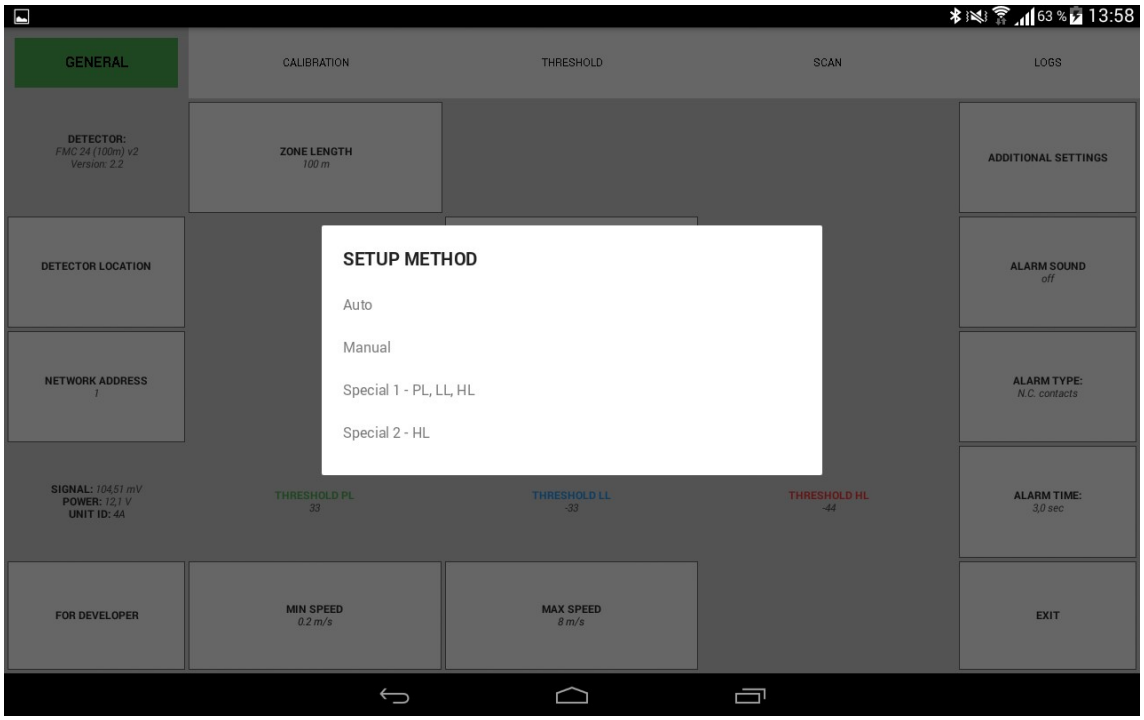


**Fig.6.4**
**Select method: Manual**

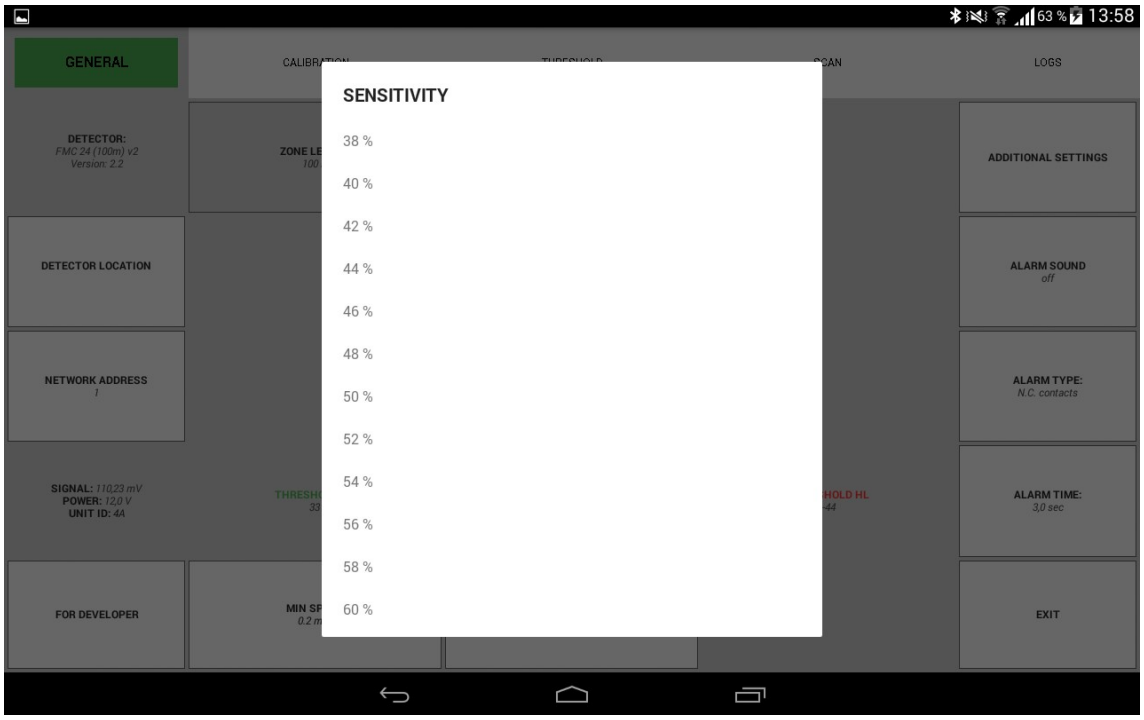


**Fig.6.5 Sensitivity window is active, zone length is deactive.**

6.2.1. Set the sensitivity with the “approved” passages. Cross these passages in “full height” and “bent” on different distances from Tx and Rx. It is recommended to begin doing these “approved” passages in the middle of the protected zone. After each passage it is necessary to leave the detection zone for the distance of 1-2 m and make a pause from 5 to 7 sec. Otherwise, the results of the previous passage can influence on the next one. If needed change the sensitivity.

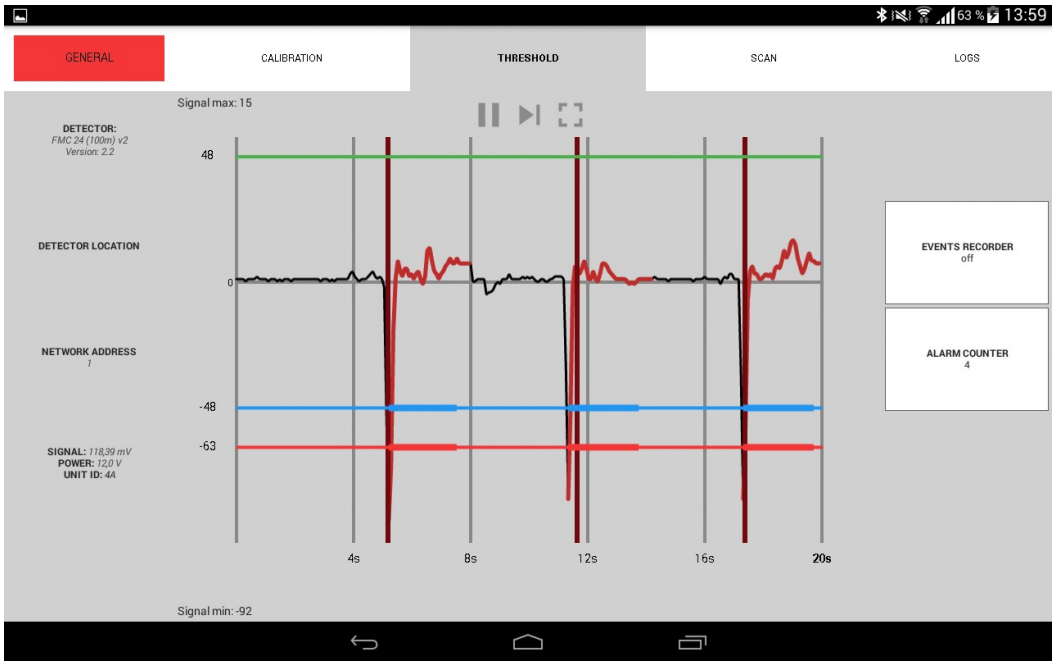


**Fig. 6.6 Testing of detection zone**

6.2.2 Then adjustment of sensitivity is completed. Disconnect the RS-485 and close the RX cover.

## 7. SCANNING

In order to monitor electronic environment in the place, where the sensors receiver is installed, additionally to evaluate the influence of neighboring detectors, select SCAN tab. The histogram of signal levels will be displayed in the window for each of the eight frequency channels (Figure 7.1). If necessary, you can use the histogram scaling function (ZOOM).

The “own” transmitter’s signal level must be at least 5 times higher than the background level, when the transmitter is off. Otherwise, select another band (channel) with minimum background level.

## 8. WORK WITH LOG

During operation, the detector records all occurring events and writes them to non-volatile memory. To view the events history it is necessary to open LOGS tab (Figure 8.1), after that the information from the detector's memory will be read to the Android-device.

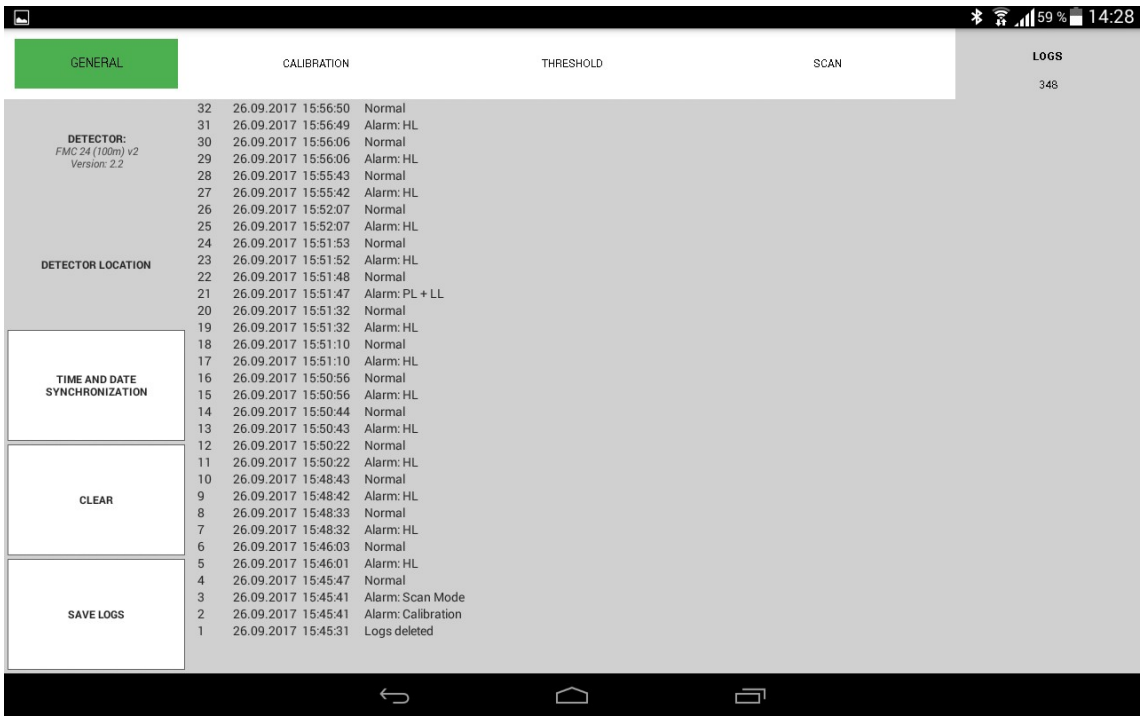


**Figure 8.1**

**LOGS** contain the history of statuses of each detector input (Normal, Alarm, Break, Closed) and duty personnel actions history (changing the detector settings).
Log can be used for the detailed analysis of the events that occurred during operation.
For convenience, after switching on the detector it is recommended to set the date and time. For that it is necessary to press TIME AND DATE SYNCRONIZATION button. Time and date are used to generate entries in the event log.

If the detector power fails, time and date are not saved. Therefore, after each power failure, time and date should be set again.

Maximum number of records that can be stored in the detector's memory is 1,000. When 1,001-st event occurs, the oldest record is deleted. Thus, up to 1,000 recent event records can be stored in the detector's memory.

It is possible to save the log into a text file. To do this, press SAVE LOGS button. The log can be cleared by pressing CLEAR button. (**Figure 8.2)**

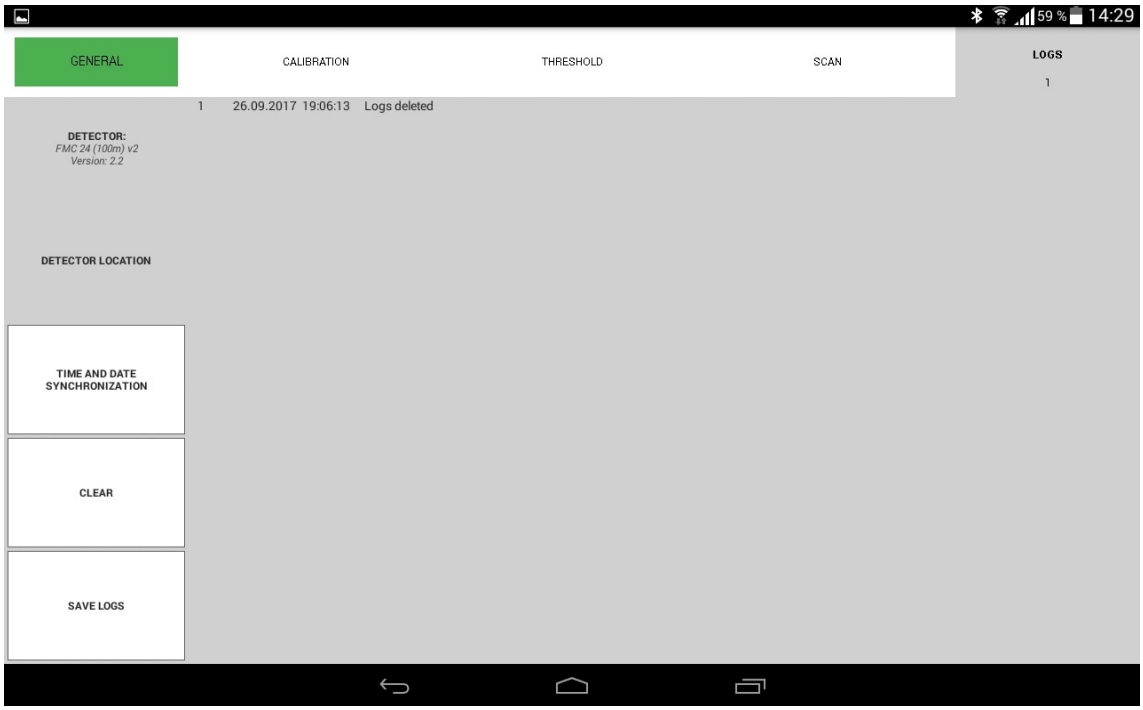


**Figure 8.2**

## 9. INSTALLATION OF SOFTWARE FOR COMPUTER USING MICROSOFT WINDOWS OPERATION SYSTEM.

You can download the latest installation version of the software from our website http://www.forteza.com→ support, or you can find it in the USB flash drives, which will come in delivery set of the senor. Software's name is **Forteza Software Windows** (stylized F with orange-coloured edging).

The first time you run the program, you need to select the communication port (COM-Port).

Connection to the computer is carried out in two ways:

1. Connect the RS 485/USB program converter using the cable with the plug connector (included in the delivery set) and connect to the receiver's port RS-485. On the main window in Communication settings tab→Detector address must be selected for Jack (253)
2. Connect the RS 485 program converter to communicational network wires (RS A to white, RS B to green), which are in the receiver's eight-strand wire. On the main window in Communication settings tab→Detector address must be selected for a number (by factory default-1).

Converter can be RS-BL or RS485 to USB.

**Further work with the software is intuitively clear and analogical to work with Forteza Android Software.**

**Attention !**

**PC program Forteza Software Windows has implemented ability to perform a test in order to check the environmental influence on the sensors protection zone and to receive recommendations for selecting the levels of the thresholds, which are in use.**

The sequence of actions when performing the test:

1. Perform sensor adjustment (orientation of the transmitter / receiver to each other)
2. Select levels of thresholds for intruder detection.
3. Activate the test

During the test:

- The intruder must not be in the detection zone.
- Simulate possible environmental influence on the detection zone (movement of nearby transport or people, swaying of branches or bushes, due to the wind and etc.)

Duration of the test:

- Minimum – 15 seconds
- Maximum – until the activation of the software widow "Next"

Possible messages after the test procedure:

- Noise immunity is good – it means that the value of the interference level / threshold level ratio is sufficient for the sensor to work stably.
- Noise immunity is bad – it means that the value of the interference level / threshold level ratio is not sufficient for the sensor to work stably and is critical. The display shows the recommended threshold levels for such interference.
- Very big interference – it means that the value of the interference level / threshold level ratio is unacceptable. Sensors stable operation is not possible.

## 10. MAINTENANCE

### 10.1. Performance check

10.1.1. During the exploitation it is recommended to test the sensor operability transmitting the remote control signal TEST one a week.

### 10.2. Maintenance check

10.2.1. The sensor maintenance should be conducted by people, who underwent special safety trainings.

10.2.2. During the sensor exploitation it is necessary to conduct check and preventive works.

10.2.2.1. Every month carry out visual examination of the sensor units and the protected sector.

It is necessary to check:

- the absence of dust, dirt, snow and ice from the side of Tx signal transmission and Rx signal reception; clean the units if necessary;
- the absence of foreign objects in the protected sector.

10.2.2.2. Every quarter:

- carry out all monthly works;
- check the cables and cable connections.

10.2.2.3. The grass height is controlled during seasonal works. If the grass height is over 0,3 m, the grass should be mown down.

10.2.3. If the snow height changes, false alarms can be generated because of the signal reduction at the Rx input. In this case it is necessary to remove the snow or to change the height of Tx and Rx antennas.

After the height of the antennas is changed, they should be aligned. The thresholds should be aligned as described above.

## 11. SAFETY MEASURES

11.1. The current safety standards for the operation with electrical facilities with the voltage up to 1000 V should be observed during mounting, preventive maintenance, and repair of the sensor.

11.2. The sensor's power supply is 9…30 VDC. That's why before the sensor operation it is necessary to study the elements and cables arrangement in the power supply.

11.3. Cables should be laid, terminated and connected to the sockets only when the supply voltage is OFF.

11.4. Replace a fuse in the power supply when the power supply is OFF.

11.5. It is prohibited to mount and maintain the sensor at thunderstorms.

11.6. Installation and maintenance of the sensor must be performed only by people, who underwent special safety trainings and became acquainted with safety measures.

11.7. It is recommended to install a separate switch on the power supply line.

## 12. STORAGE

**12.1.** The detectors should be stored in the package in warehouses at an ambient temperature +5°C…+30 °C and relative humidity 85% maximum.

During storage the influence of hostile environment should be prevented.

## 13. TRANSPORTATION

**13.1**. Packaged detectors can be transported by any transport (if by plane – in pressurized modules) if they are transported in covered cars, holds or covered bodies they can be transported at the distance up to 10 000 km.

The boxes should be placed in a manner that prevents their shifting or falling in case of jolts and blows.

**Microwave Intrusion Sensor**
**“Forteza FMC 24 Pro 50/100/200/300”**

The purpose of the sensor and its specifications are given in the corresponding clauses of the data sheet of the Description Manual & Service Instruction No. 2022-08-15

DELIVERY KIT

The delivery kit includes:

| | |
|---|---|
| Transmitter | 1 item; |
| Receiver | 1 item; |
| Mounting kit | 1 kit; |
| User manual | 1 item. |
| Kit of tools and accessories | 1 kit; |

## 14. ACCEPTANCE CERTIFICATE

The sensor “Forteza FMC 24 Pro”_____№_____ meets performance specifications of the Description Manual & Service Instruction No. 2022-08-15 and it is considered as operable.

Date of issue _____202__ .

## 15. MANUFACTURER’S GUARANTEES

The manufacturer guarantees the conformity of the sensor specifications to requirements of the Description Manual & Service Instruction No. 2022-08-15 rules specified by the Description Manual & Service Instruction No. 2022-08-15

Warranty period is 24 months since the date of sale by the manufacturer.

Guarantees do not cover the sensors:

- with broken guarantee stamps;
- with mechanical failures,
- and also those which are out of order because of natural disasters (lightning, fire and flood).

Mean lifetime is 8 years.

**Office:**
JCS “Forteza” 2 Silutes pl. ofc 525, LT-91111, Klaipeda, Lithuania
Phone +370 46 411353 Fax +370 46 412231 E-mail forteza@forteza.com